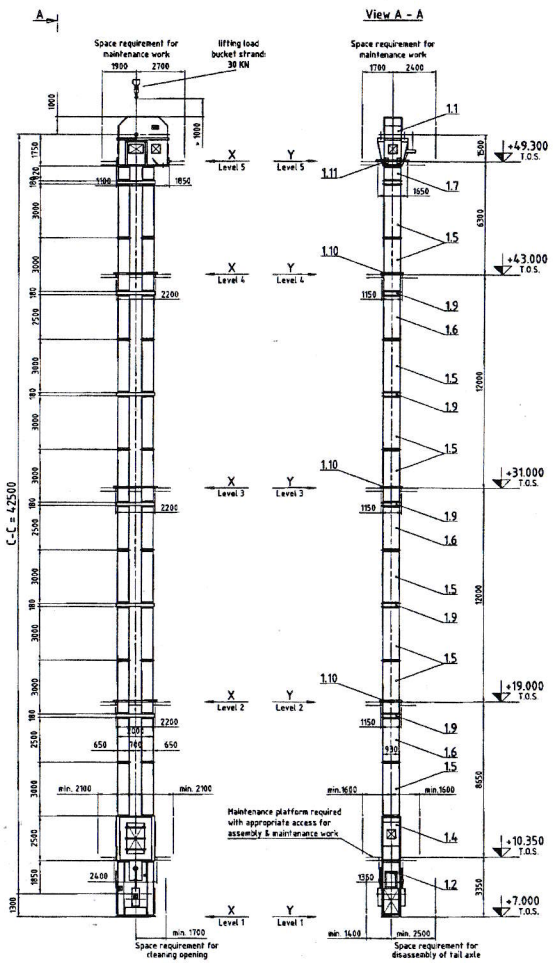

	Earthquake Loads [kN]	
	X, Y	Z
Level 1 +7.000	± 18,65 kN	± 96,46 kN
Level 2 +19.000	± 23,65 kN	
Level 3 +31.000	± 14,72 kN	
Level 4 +43.000	→ 4,43 kN	
Level 5 +49.300	± 76,82 kN	

Horizontal loads calculated on the basis of: Earthquake Rating: Zone5

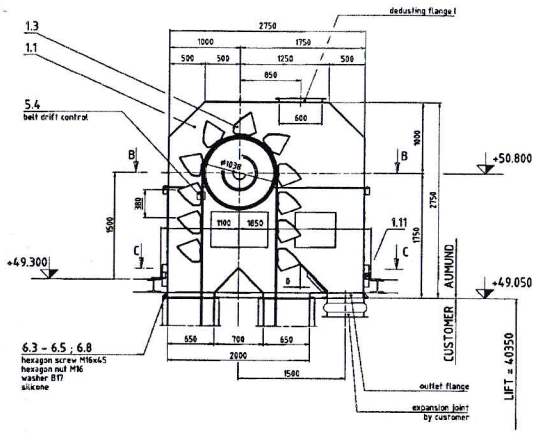

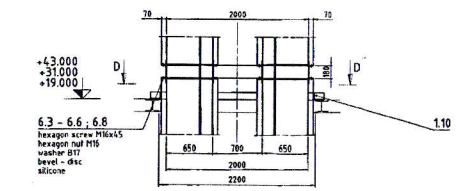

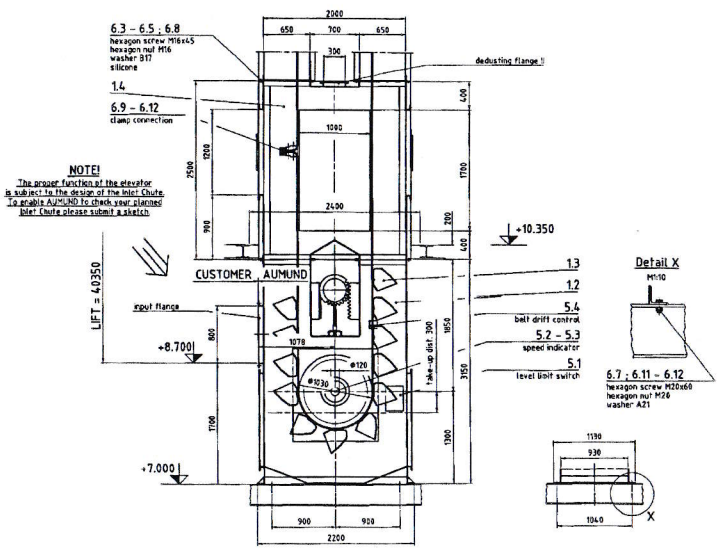

NOTE!
The proper function of the elevator is subject to the design of the inlet chute. To enable AUMUND to check your planned inlet chute please submit a sketch.

Section B - B

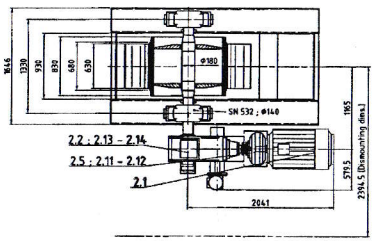

Section C - C
Bucket elevator guides fitted at site and welded to the platform.
NOTE: Guides shall not be welded to the bucket elevator head!

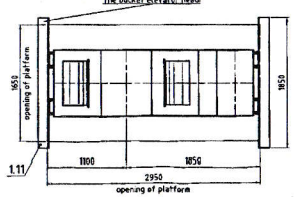

Section D - D
Bucket elevator guide frame fitted at site, welded together as a frame and welded to the platform.
NOTE: Guides shall not be welded to the casing of the bucket elevator!

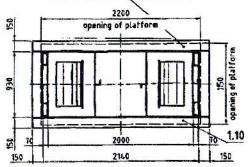

TECHNICAL DATA

PROJECT NO.	: 42297	ITEM NO.	:
BELT BUCKET ELEVATOR SIZE	: BW-G 630/320	BUCKET SPACING [mm]	: 300
DRIVE DRUM Ø [mm]	: 1000	FILLING RATE [%]	: 73.4
CENTRE DISTANCE [mm]	: 42500	MATERIAL	: Cement
BELT QUALITY	: N 1210 + 1.5M*(C)	BULK DENSITY [t/m³]	: 0.8
CONVEYING CAPACITY [t/h]	: 250	PARTICLE SIZE [mm]	: 1
VELOCITY [m/s]	: 1.57	MATERIAL TEMP. [°C]	: 120
AMBIENT TEMPERATURE [°C]	: 45		

REQUIRED DRIVE DATA

DRIVE SHAFT CAPACITY [kW]	: 32.4
SPEED OF ROTATION [rpm]	: 28.6
TORQUE ON DRIVE SHAFT [kNm]	: 10.8

DRIVE DATA

2.1	AC-MOTOR	: ABB	SPEED OF ROTATION [rpm]	: 1482
	STANDARD	: IEC	SHAFT SIZE [Ø x l mm]	: 75 x 140
	TYPE AND SIZE	: 2SM5	INSULATION	: F/B
	CAPACITY [kW]	: 75	TYPE OF PROTECTION	: IP54
	VOLTAGE [V]	: 398	STRUCTURAL FORM	: B3
	FREQUENCY [Hz]	: 50	WEIGHT [kg]	: 590
	SUPPLIER	: Customer		
2.2	BEVEL-HELICAL GEAR UNIT	: FLENDER	WITH FAN	: yes
	OUTPUT SHAFT DESIGN	: hollow Shaft	WITH BACKSTOP	: yes
	GEARBOX SIZE	: B3CH8	OIL QUANTITY [l]	: 11
	NOM. POWER RATING [kW]	: 88	INPUT SHAFT [Ø x l mm]	: 50 x 90
	NOM. RATIO	: 50	OUTPUT SHAFT [Ø x l mm]	: 130 x 450
	DESIGN	: B	SENSE OF ROTATION	: left
	SUPPLIER	: AUMUND	OPERATING WEIGHT [kg]	: 870
	AUXILIARY GEAR UNIT for	: empty buckets	OVERRUNNING CLUTCH	: yes
	GEARBOX TYPE AND SIZE	: K7 48	SPEED MONITOR	: yes
	MOTOR TYPE AND SIZE	: 90ML4-W	OIL QUANTITY [l]	: 2.3
	POWER [kW]	: 1.5	OPERATING WEIGHT [kg]	: 65
	SUPPLIER	: AUMUND		
2.5	TURBO COUPLING	: FLENDER	BORE INPUT SIDE [Ø x l mm]	: 75 x 140
	TYPE AND SIZE	: FLUDEX-FAD 456	BORE OUTPUT SIDE [Ø x l mm]	: 50 x 100
	SUPPLIER	: AUMUND	OPERATING WEIGHT [kg]	: 72

CONTROL EQUIPMENT

5.1	LEVEL LIMIT SWITCH IN THE BUCKET ELEVATOR BOOT	
	TYPE	: AD911 (CE) (MEPA / FILSA)
	VOLTAGE	: 115 - 230 V AC ; 24 - 250 V DC
5.2	PROXIMITY SWITCH MOVEMENT DETECTOR	
	TYPE	: NJ5-18-GK-N-150 (Pepperl & Fuchs)
	VOLTAGE	: 8 V DC Namur (KFU8-EWD-1.D)
5.3	SPEED MONITOR INSTALLED IN THE MOTION CONTROL CENTRE	
	TYPE	: KFU8-DWD-1.D (Pepperl & Fuchs)
	VOLTAGE	: 48 - 253 V AC ; 20 - 90 V DC
5.4	PROXIMITY SWITCH FOR STRAIGHT-RUN CONTROL OF BELT	
	TYPE	: NCB15+U1+V (Pepperl & Fuchs)
	VOLTAGE	: 20 - 253 V AC ; 20 - 300 V DC
2.11	NON-CONTACTING THERMAL SWITCH UNIT	
	TYPE	: EGC-M18x15 / BM5-G18-BV0 (Flender)
	VOLTAGE	: 8 V DC Namur (EWD)
2.12	EVALUATOR INSTALLED IN THE CONTROL ROOM	
	TYPE	: EWD/2X-250VAC (Flender)
	VOLTAGE	: 20 - 250 V AC / DC
2.13	SPEED INDICATOR IN THE AUXILIARY DRIVE UNIT	
	TYPE	: BG-G18-Y1 (Turck / Flender)
	VOLTAGE	: 8 V DC Namur (KFU8-EWD-1.D)
2.14	SPEED MONITOR INSTALLED IN THE MOTION CONTROL CENTRE	
	TYPE	: KFU8-DWS-1.D (Pepperl & Fuchs)
	VOLTAGE	: 48 - 253 V AC ; 20 - 90 V DC

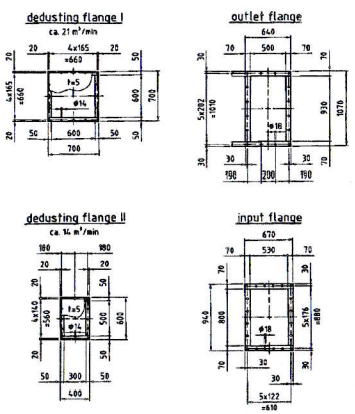

Our Project 42297

B	Gear unit make FLENDER instead of SEW	07.09.2006	ABRAHAM
A	Drawg revised	28.08.2006	ABRAHAM

CAD - Zeichnung, Änderung nur im CAD - System zulässig!

Gurtbecherwerk
Belt Bucket Elevator BW-G 630/320

Scale: 1:10 ; 1:25 ; 1:100
Item: 112050
Sheet: 1
Sheet: 1
Rev.: B
Drawing-No.: 30050600

	prepared	checked	verify	Ch. dept.
Name	12.07.2006	07.09.2006	07.09.2006	Ch. for
Date	ABRAHAM	ABRAHAM	ABRAHAM	Dept. no.

AUMUND